2.1

a) $G_i(s) = C \cdot (sI - A)^{-1} B$

$= (1 \quad 1) \cdot \begin{pmatrix} s & -1 \\ -2 & s+1 \end{pmatrix}^{-1} \begin{pmatrix} 0 \\ 1 \end{pmatrix}$

$= (1 \quad 1) \cdot \frac{1}{s^2+s-2} \begin{pmatrix} s+1 & 1 \\ 2 & s \end{pmatrix} \begin{pmatrix} 0 \\ 1 \end{pmatrix}$

$= (1 \quad 1) \cdot \frac{1}{s^2+s-2} \begin{pmatrix} 1 \\ s \end{pmatrix}$

$= \frac{s+1}{s^2+s-2} = \frac{s+1}{(s-1)(s+2)}$

⇒ Stabilität: VZB verletzt ⇒ nicht asymptotisch stabil

⇒ Pole bei $s_1 = 1$ $s_2 = -2$ ⇒ instabil

b) $K_i(s) = \frac{Z_u(s)}{N_u(s)}$

$Y_1 = G_i(s) \cdot K_i(s) \cdot (U(s) - Y_1(s))$

$Y_1(s) = \frac{G_i(s) \cdot K_i(s)}{1 + G_i(s) \cdot K_i(s)} U(s)$

$\Rightarrow G_i^r(s) = \frac{G_i(s) \cdot \frac{Z_u(s)}{N_u(s)}}{1 + G_i(s) \cdot \frac{Z_u(s)}{N_u(s)}} = \frac{G_i(s) \cdot Z_u(s)}{N_u(s) + G_i(s) \cdot Z_u(s)}$

$= \frac{\frac{s+1}{(s-1)(s+2)} \cdot Z_u(s)}{N_u(s) + \frac{s+1}{(s-1)(s+2)} Z_u(s)} = \frac{(s+1) Z_u(s)}{(s-1)(s+2) N_u(s) + (s+1) \cdot Z_u(s)}$

P-Regler: $K_P(s) = k_0$

$\Rightarrow G_i^r(s) = \frac{k_0 (s+1)}{(s-1)(s+2) + (s+1) k_0} = \frac{k_0 (s+1)}{s^2 + s - 2 + k_0 s + k_0} = \frac{k_0 \cdot (s+1)}{s^2 + (k_0+1) \cdot s + k_0 - 2}$

VZB Hurwitz: $k_0 + 1 > 0 \quad \wedge \quad k_0 - 2 > 0$

$\Leftrightarrow k_0 > -1 \qquad \boxed{k_0 > 2}$ für $k_0 > 2$ ist der P-Regler geeignet

PD-Regler $K_{PD}(s) = k_0 + s \cdot k_1$

$\Rightarrow G_i^r(s) = \frac{(s+1) \cdot (k_0 + s k_1)}{s^2 + s - 2 + (s+1) \cdot (k_0 + s k_1)} = \frac{(s+1) \cdot (k_0 + s k_1)}{s^2 + s - 2 + s^2 k_1 + s \cdot k_0 + k_0 + s k_1} = \frac{(s+1)(k_0 + s k_1)}{(k_1+1) s^2 + (k_0 + k_1 + 1) s + k_0 - 2}$

VZB Hurwitz: $\frac{k_0 - 2}{k_1 + 1} > 0 \qquad \frac{k_0 + k_1 + 1}{k_1 + 1} > 0$

Fall 1 $\boxed{k_1 > -1} \Rightarrow \boxed{k_0 > 2}$ Fall 2 $\boxed{k_0 < -1} \Rightarrow k_0 < 2 \wedge \boxed{k_0 < 0}$

PI-Regler $K_{PI}(s) = K_0 + \frac{K_2}{s} = \frac{K_0 \cdot s + K_2}{s}$

$$\Rightarrow G_i^r(s) = \frac{(s+1)\cdot(K_0 s + K_2)}{(s-1)(s+2)\cdot s + (s+1)(K_0 \cdot s + K_2)}$$

$$= \frac{(s+1)(K_0 s + K_2)}{s^3 + s^2 - 2s + K_0 \cdot s^2 + K_2 \cdot s + K_0 \cdot s + K_2}$$

$$= \frac{(s+1)(K_0 \cdot s + K_2)}{s^3 + (K_0+1)s^2 + (K_0 + K_2 - 2)s + K_2}$$

Hurwitz: VzB: $K_2 > 0$ $K_0 > -1$ $K_0 + K_2 > 2$

BWB: $(K_0 + K_2 - 2)(K_0 + 1) - K_2 > 0$

$K_0^2 + K_2 K_0 - 2K_0 + K_0 + K_2 - 2 - K_2 > 0$

$K_0^2 + K_2 K_0 - K_0 - 2 > 0$

$K_0^2 + K_0 \cdot (K_2 - 1) - 2 > 0$

c) doppelte Polstelle $\Rightarrow$ PI-Regler ist raus

$\Rightarrow$ doppelter Pol bei $s = -1/T$ $\Rightarrow$ $(s + 1/T)^2 = s^2 + \frac{2}{T}s + \frac{1}{T^2}$ mit T^2 erweitern $T^2 s^2 + 2Ts + 1$

$(sT+1)^2 = T^2 s^2 + 2Ts + 1$

P-Regler $s^2 + (K_0+1)\cdot s + K_0 - 2 \Leftrightarrow \frac{1}{K_0 - 2}s^2 + \frac{K_0+1}{K_0-2}s + 1$

$K_0 - 2 = \frac{1}{T^2} \Rightarrow K_0 = \frac{1}{T^2} + 2$

$K_0 + 1 = \frac{2}{T} \Rightarrow K_0 = \frac{2}{T} - 1$ $\Rightarrow$ für P-Regler nicht möglich

PD-Regler $(K_1+1)s^2 + (K_0 + K_1 + 1)s + K_0 - 2$ $\quad s^2 + \frac{K_0 + K_1 + 1}{K_1 + 1}s + \frac{K_0 - 2}{K_1 + 1} \overset{!}{=} s^2 + \frac{2}{T}s + \frac{1}{T^2}$

$\Rightarrow$ (1) $\frac{K_0 + K_1 + 1}{K_1 + 1} = \frac{2}{T}$ $\Leftrightarrow \frac{K_0}{K_1 + 1} = \frac{2}{T} - 1$ $\Leftrightarrow K_0 = \left(\frac{2}{T} - 1\right)\cdot(K_1 + 1)$

$\Rightarrow$ (2) $\frac{K_0 - 2}{K_1 + 1} = \frac{1}{T^2}$

(1) in (2): $\frac{\left(\frac{2}{T} - 1\right)(K_1 + 1) - 2}{K_1 + 1} = \frac{1}{T^2}$

$\Leftrightarrow \frac{2}{T} - 1 - \frac{2}{K_1 + 1} = \frac{1}{T^2}$

$$\Leftrightarrow \quad -\frac{1}{T^2}+\frac{2}{T}-1 = \frac{2}{k_1+1}$$

$$\Rightarrow \quad k_1+1 = \frac{-2}{\frac{1}{T^2}-\frac{2}{T}+1}$$

$$\Leftrightarrow k_1 = \frac{-2-\frac{1}{T^2}+\frac{2}{T}-1}{\frac{1}{T^2}-\frac{2}{T}+1}$$

$$= \frac{-3+\frac{2}{T}-\frac{1}{T^2}}{1-\frac{2}{T}+\frac{1}{T^2}} = \frac{-3T^2+2T-1}{T^2-2T+1}$$

$$\Rightarrow k_0 = \left(\frac{2}{T}-1\right)\cdot(k_1+1)$$

$$= \left(\frac{2}{T}-1\right)\cdot\left(\frac{-3T^2+2T-1+T^2-2T+1}{T^2-2T+1}\right)$$

$$= \left(\frac{2}{T}-1\right)\cdot\frac{-2T^2}{T^2-2T+1}$$

$$= \frac{2T^2-4T}{T^2-2T+1} = \frac{2(T^2-2T)}{T^2-2T+1}$$

d) $G_{i;r}(s) = \dfrac{s+3}{s^2+2s+1}$ $\qquad G_a(s) = \dfrac{s-1}{s+2}$

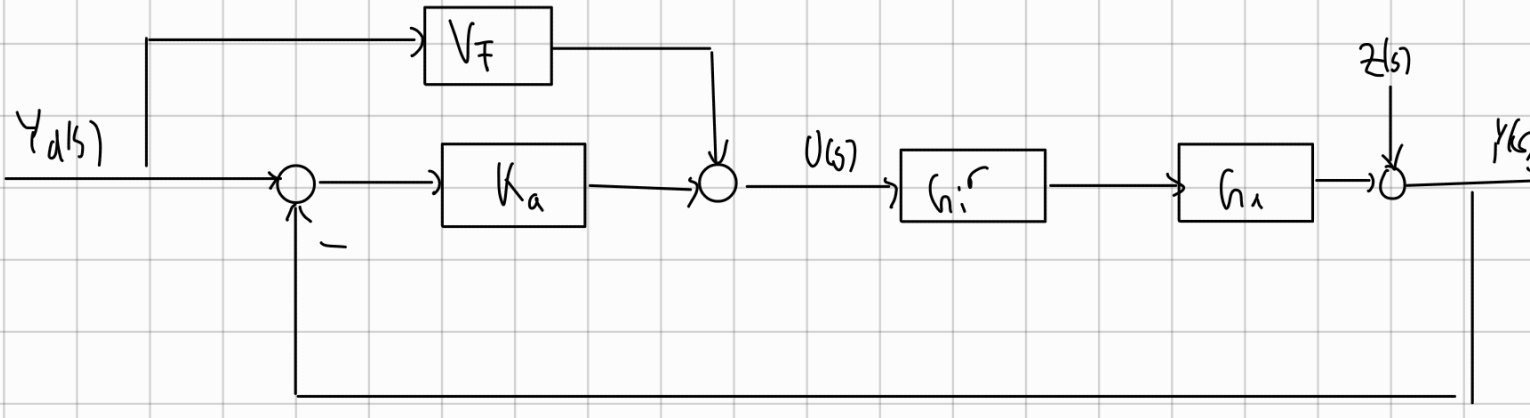

$$Y = Z + G_a \cdot G_i^r \cdot U \qquad U = V_F \cdot Y_d + K_a \cdot (Y_d - Y)$$

$$\Rightarrow \quad Y(s) = Z(s) + G_a(s) \cdot G_i^r(s) \cdot \left[V_F(s) \cdot Y_d(s) + K_a(s) \cdot Y_d(s) - K_a \cdot Y(s) \right]$$

$$\Rightarrow \quad Y(s) \cdot \left[1 + G_a(s) \cdot G_i^r(s) \cdot K_a(s) \right] = Z(s) + Y_d(s) \cdot G_a(s) G_i^r(s) \left(V_F(s) + K_a(s) \right)$$

$$\Rightarrow Y(s) = \frac{G_a(s) G_i^r(s) \cdot (V_F(s) + K_a(s))}{1 + G_a(s) \cdot G_i^r(s) \cdot K_a(s)} \cdot Y_d(s) + \frac{1}{1 + G_a(s) G_i^r(s) \cdot K_a(s)} \cdot Z(s)$$

$$\Rightarrow G_{yd\,y} = \frac{G_a(s) G_i^r(s) \cdot (V_F(s) + K_a(s))}{1 + G_a(s) \cdot G_i^r(s) \cdot K_a(s)} = \frac{\frac{s-1}{s+2} \cdot \frac{s+3}{(s+1)^2} \cdot (V_F(s) + K_a(s))}{1 + \frac{s-1}{s+2} \frac{s+3}{(s+1)^2} \cdot K_a(s)}$$

$$= \frac{(s-1)(s+3)\,(V_F(s) + K_a(s))}{(s+2)(s+1)^2 + (s-1)(s+3) \cdot K_a(s)}$$

$$G_{ey} = \frac{1}{1 + G_a(s) \cdot G_i^r(s) \cdot K_a(s)} = \frac{(s+2)(s+1)^2}{(s+2)(s+1)^2 + (s-1)(s+3)\, K_a(s)}$$

e) $G_{yd\,y} \overset{!}{=} 1 \quad \Rightarrow \quad (s-1)(s+3)\,(V_F^*(s) + K_a(s)) = (s+2)(s+1)^2 + (s-1)(s+3) \cdot K_a(s)$

$$\Leftrightarrow \quad (s-1)(s+3)\, V_F^*(s) = (s+2)(s+1)^2$$

$$\Rightarrow \quad V_F^*(s) = \frac{(s+2)(s+1)^2}{(s-1)(s+3)} \qquad G = \frac{(s-1)(s+3)}{(s+2)(s+1)^2}$$

Problem: 1. Nennergrad < Zählergrad $\Rightarrow$ akausal $\Rightarrow$ erweitern mit schnellem PT1-Glied

2. Instabil, da positive Polstelle bei $s=1$ $\Rightarrow$ aufteilen in Allpass & Anteil ohne Instabilität

$$G = \frac{(s-1)(s+3)}{(s+2)(s+1)^2} = \underbrace{\frac{1-s}{1+s}}_{\text{Allpass}} \underbrace{\left(- \frac{(s+1)(s+3)}{(s+2)(s+1)^2} \right)}_{V_F^{-1}}$$

$$G_{yd\,y} = \frac{G_a(s) G_i^r(s) \cdot V_F(s) - 1}{1 + G_a(s) G_i^r(s) K_a(s)} + 1$$

$$\Rightarrow \quad V_F(s) = - \frac{(s+2)(s+1)^2}{(s+1)(s+3)\left(\frac{s}{\omega_1} + 1\right)}$$

$$= \frac{-\frac{(s-1)}{(s+1)} \cdot \frac{1}{\frac{s}{\omega_1}+1} - 1}{1 + G_a(s) G_i^r(s) K_a(s)} + 1$$

$s = 0 \Rightarrow G_{yd\,y} = 1$ ✓

f1 Für Stabilität Hurwitz anwenden auf Nennerpolynom:

$$(s+2)(s+1)^2 + (s-1)(s+3)\cdot k_a(s)$$

$$\Leftrightarrow (s+2)(s^2+2s+1) + (s^2+2s-3)\cdot k_a$$

$$\Leftrightarrow s^3+2s^2+s+2s^2+4s+2 + k_a s^2 + 2k_a s - 3k_a$$

$$\Leftrightarrow s^3 + (k_a+4)s^2 + (2k_a+5)s + 2 - 3k_a$$

VtB: $k_a+4 > 0 \Rightarrow k_a > -4$

$2k_a+5 > 0 \Rightarrow k_a > -\frac{5}{2}$

$2-3k_a > 0 \Rightarrow k_a < \frac{2}{3}$

aus VtB: $-\frac{5}{2} < k_a < \frac{2}{3}$

BWB: $a_1 a_2 - a_0 a_3 > 0$

$$\Rightarrow (k_a+4)(2k_a+5) + 3k_a - 2 > 0$$

$$\Leftrightarrow 2k_a^2 + 8k_a + 5k_a + 20 + 3k_a - 2 > 0$$

$$\Leftrightarrow 2k_a^2 + 16k_a + 18 > 0$$

$$\Rightarrow k_{a_{1/2}} = \frac{-16 \pm \sqrt{16^2 - 4\cdot 2\cdot 18}}{4}$$

$$= \frac{-16 \pm \sqrt{112}}{4} = -4 \pm \sqrt{7}$$

$$\Rightarrow k_a < -4-\sqrt{7} \quad \cap \quad k_a > -4+\sqrt{7}$$

$$\approx -6{,}65 \qquad \approx -1{,}35$$

$$\Rightarrow \boxed{-4+\sqrt{7} < k_a < \frac{2}{3}}$$